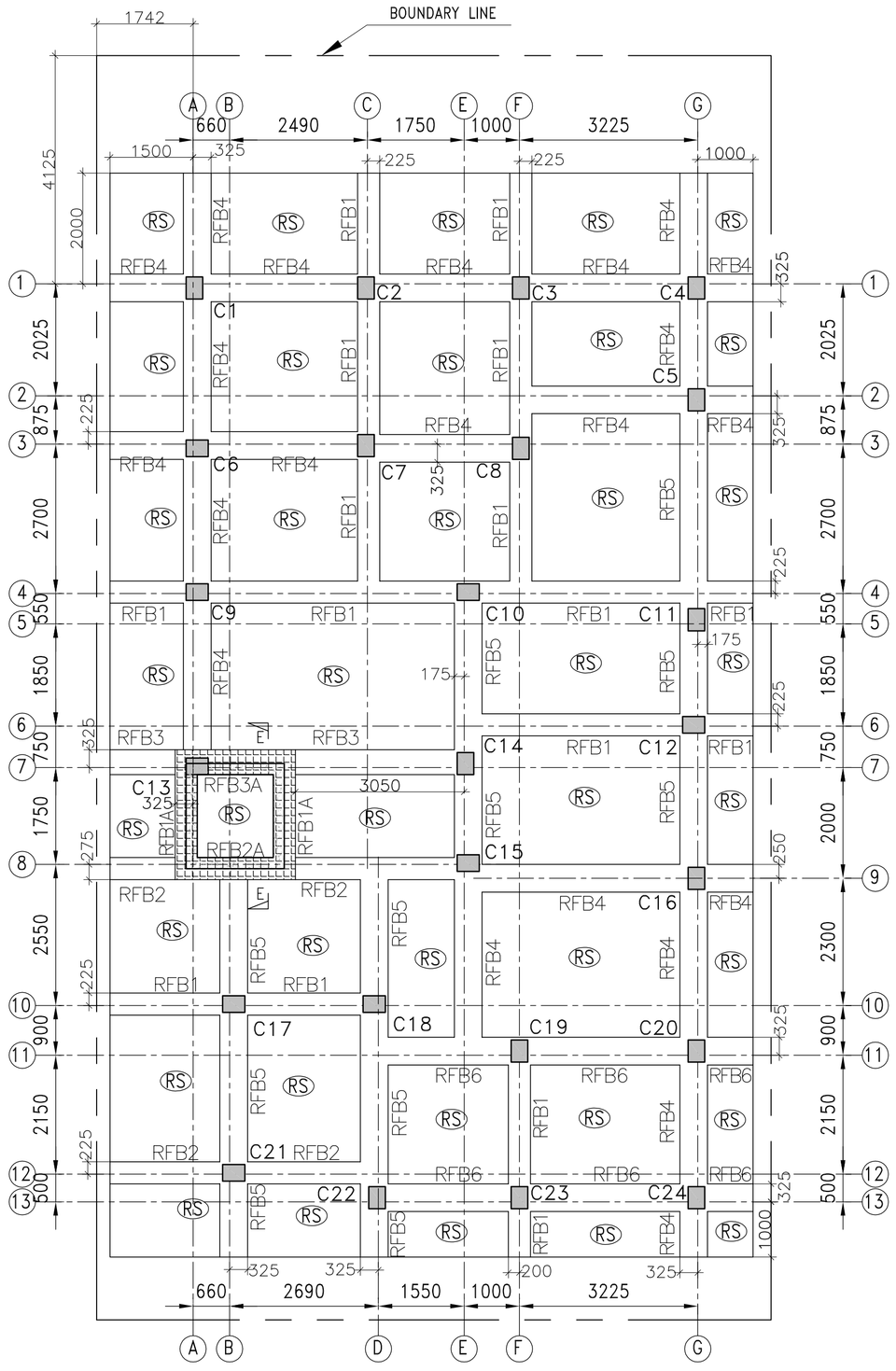

FOUNDATION LAYOUT PLAN
RS MARKED SLAB THICKNESS 300 mm
SCALE – 1:100

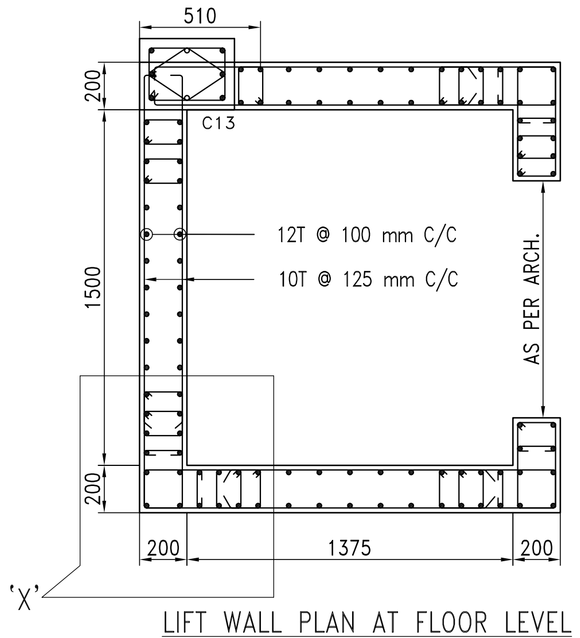

LIFT WALL PLAN AT FLOOR LEVEL
SECTION (S–S)
SCALE 1:25

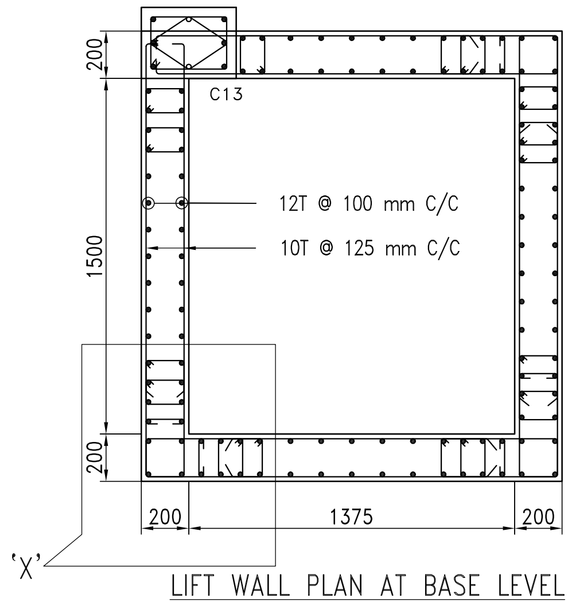

LIFT WALL PLAN AT BASE LEVEL
SECTION (R–R)
SCALE 1:25

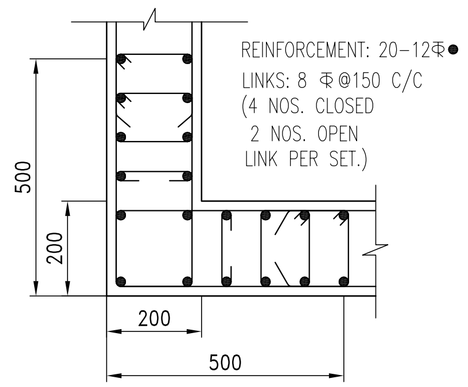

DETAIL "X"
SCALE–N.T.S

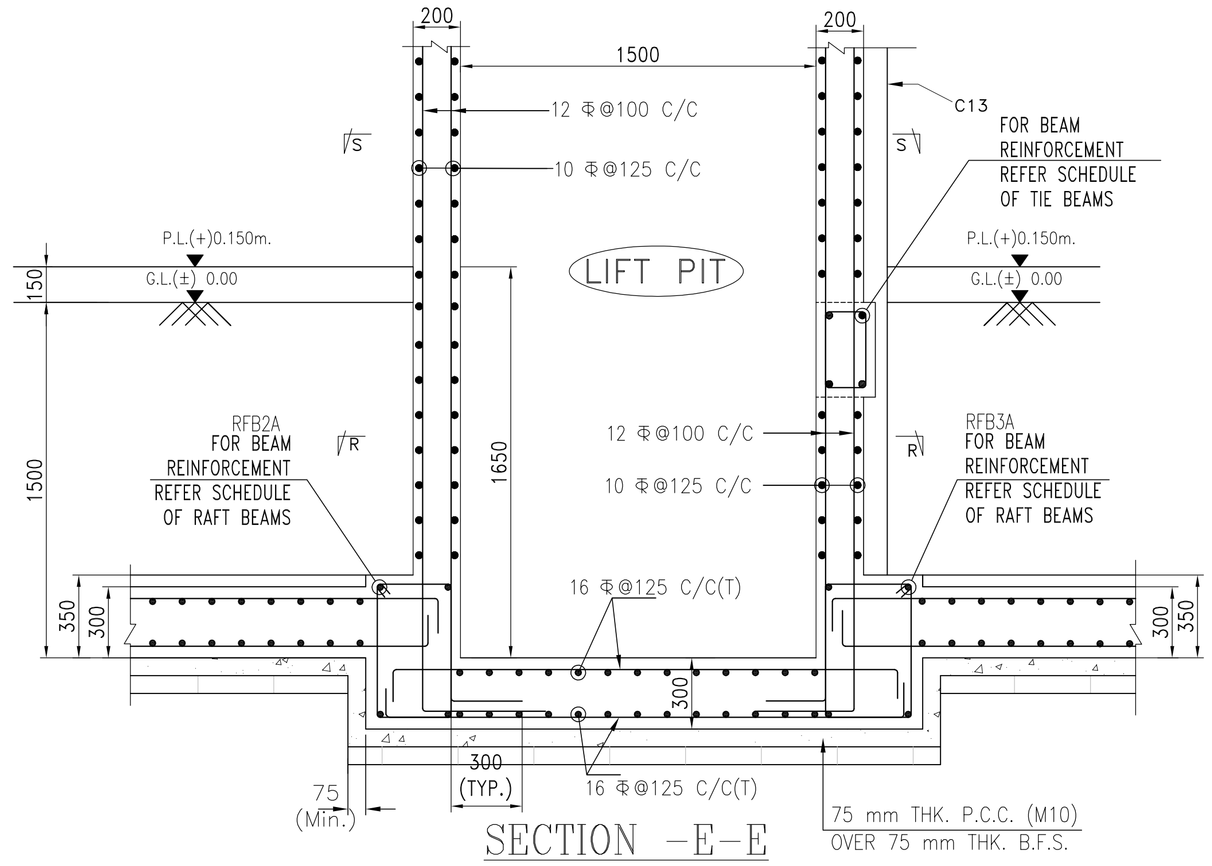

SECTION –E–E
SCALE– 1:25

NOTES:–

1. UNLESS OTHERWISE STATED ALL CONSTRUCTION BE CARRIED OUT CONFORMING TO RELEVANT CODES OF PRACTICE.
2. ALL DIMENSIONS ARE IN MILLIMETERS & LEVEL EXCEPT OTHERWISE MENTIONED ONLY WRITTEN BE FOLLOWED.ALL LEVELS GIVEN IN STRUCTUR IN ACCORDANCE WITH ARCHITECTURAL DRAWIN STRUCTURAL LEVEL ONLY (WITHOUT FINISH).
3. ALL STRUCTURAL DRAWINGS SHALL BE READ A DRAWING AS WELL AS RELEVANT ARCHITECTUR
4. ANY DISCREPANCY IN THE STRUCTURAL AND ARCHITECTURAL DRAWINGS SHALL BE BROUGHT TO THE NOTICE OF STRUCTURAL CONSULTANT BEFORE EXECUTION OF WORK.
5. UNLESS OTHERWISE SPECIFIED ALL REINFORCEMENT TO BE USED SHALL BE TMT BARS OF GRADE Fe–500/500 D CONFORMING TO IS–1786–2008.
6. ADEQUATE CHAIR BARS TO BE PROVIDED TO KEEP THE TOP REINFORCEMENT IN PROPER POSITION.
7. VIBRATOR SHALL BE USED FOR PROPER COMPACTION OF CONCRETE AND CURING SHALL BE DONE PROPERLY.
8. UNLESS OTHERWISE SPECIFIED DISTRIBUTION REINFORCEMENT SHALL BE 8 T @ 250 C/C.
9. CONCRETE CLEAR COVER SHALL BE AS FOLLOWS:
   i)RAFT BEAM & SLAB : 50 mm
   ii)SHEAR WALL : 20 mm
10. GRADE OF CONCRETE FOR SUBSTRUCTURE WILL BE M25 AS PER IS:456:2000.
11. DEVELOPMENT LENGTH 50XD FOR LAP & SPLICES SHOULD BE PROVIDED AS PER THE PROVISIONS LAID DOWN IN SP34:1987
12. THE NET SAFE BEARING CAPACITY OF THE RAFT SHOWN IN THE DRAWING AT DEPTH (–)1.5m. FROM G.L. HAS BEEN CONSIDERED 6 T/SQM. THIS MUST BE ENSURED AT SITE UNDER THE SUPERVISION OF A COMPETENT GEO–TECHNICAL ENGINEER FOR VALIDITY OF THIS DRAWING.
13. THE N VALUE AS DESCRIBED UNDER NOTES OF TABLE–1 OF IS–1893(PART–1)–2016 SHOULD BE ENSURED TO BE GREATER THAN 15 FOR VALIDITY OF THIS DESIGN AND DRAWING.

STRUCTURAL DRAWING OF PROPOSED PLAN OF (G+III) STORIED RESIDENTIAL BUILDING PLAN OF SANJAY KUMAR PAUL AT R.S DAG NO.- 26 , L.R. DAG NO.-27, R.S. KHATIAN NO. 343, L.R. KHATIAN NO. 4963 WARD NO.- 02, HOLDING NO1368, MADHYA DHALUA , MOUZA- DHALUA, J.L.NO.- 43, P.S. -NARENDRAPUR, DISTRICT - 24 PARGANAS (SOUTH), UNDER RAJPUR SONARPUR MUNICIPALITY,

NOTES & SPECIFICATIONS

- **ALL DIMENSIONS ARE IN MM. UNLESS OTHERWISE MENTIONED.**
- **WRITTEN DIMENSION TO BE FOLLOWED.**
- **OUTER WALLS ARE 250 MM. THK.**
- **PARTITION WALLS ARE 125 & 75 MM. THK.**
- **GRADE OF CONCRETE = M20**
- **GRADE OF STEEL = Fe415**

DECLEARATION OF L.B.S.(CLASS -I)

I HAVE CERTIFIED ON THE PLAN ITSELF WITH FULL RESPONSIBILITY THAT BUILDING RULES 1990 AS AMENDED FROM TIME TO TIME AND THAT THE SITE CONDITIONS INCLUDING THE ABUTTING ROAD CONFORM WITH THE PLAN AND THAT IT IS A BUILDABLE SITE AND NOT A TANK OR A FILLED

PABITRA DEY
L.B.S. NO - 760 , CLASS- I
NAME OF L.B.S.

DECLARATION OF STRUCTURAL ENGINEER

CERTIFIED THAT THE STRUCTURAL DESIGN & DRAWINGS OF BOTH FOUNDATION & SUPER STRUCTURE OF THE BUILDING HAS BEEMN MADE BY ME CONSIDERING ALL POSSIBLE LOADS INCLUDING THE SEISMIC LOAD AS PER THE NATIONAL BUILDING CODE OF INDIA & CERTIFIED THAT IT IS SAFE & STABLE ALL RERSPECT .

SUSMITA CHOUDHURY
ESE-0130, CLASS- I
NAME OF E.S.E

NAME OF GEO-TECHNICAL ENG.

SANJAY KUMAR PAUL
NAME OF OWNER/APPLICANT

DRAWING TITLE

FOUNDATION LAYOUT PLAN WITH REINF. DETAILS

SCALE.–1:100 OR AS SHOWN
DATE.– 30.08.2023
SHEET NO.– 1 OF 2

FOR OFFICE USE ONLY

SCHEDULE OF RAFT SLAB

SLAB MARKED	SLAB THICKNESS (mm)	REINFORCEMENT ALONG SHORTER DIRECTION		REINFORCEMENT ALONG LONGER DIRECTION	
		BOTTOM	TOP	BOTTOM	TOP
RS	300	16 Φ@125 C/C	16 Φ@125 C/C	16 Φ@125 C/C	16 Φ@125 C/C

SPECIAL NOTES:–

1. THIS STRUCTURAL DRAWING IS VALID IF THE CONSTRUCTION IS DONE USING AAC BLOCKS FOLLOWING PROPER DIMENSION OF EXTERNAL AND INTERNAL WALLS AS PER ARCHITECTURAL DRAWING.
2. THE STRUCTURE MUST BE CONSTRUCTED IN PRESENCE OF A COMPETENT STRUCTURAL ENGINEER FOR STRICT SUPERVISION.

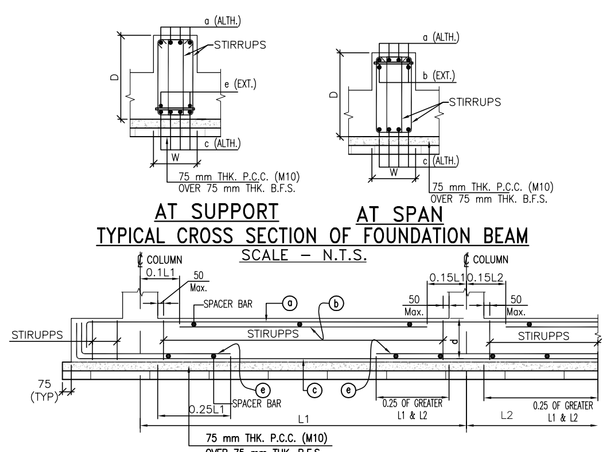

AT SUPPORT AT SPAN
TYPICAL CROSS SECTION OF FOUNDATION BEAM
SCALE – N.T.S.

TYPICAL ARRANGEMENT OF REINFORCEMENT IN FOUNDATION BEAM
(AS PER SP 34–1987)
SCALE – N.T.S.

SCHEDULE OF RAFT BEAMS

BEAM MARKED	BEAM WIDTH (W) (mm)	BEAM DEPTH (D) (mm)	TOP REINORCEMENT ALTHROUGH (a)	TOP REINORCEMENT EXTRA AT SPAN (b)	BOTTOM REINORCEMENT ALTHROUGH (c)	BOTTOM REINORCEMENT EXTRA AT SUPPORT (e)	STIRRUPS	SIDE FACE
RFB1	400	350	4–16 Φ	–	4–16 Φ	2–16 Φ	4L–8 Φ@100 C/C	–
RFB1A	650	350	4–16 Φ	–	4–16 Φ +2–16 Φ	–	4L–8 Φ@100 C/C	–
RFB2	400	350	4–16 Φ	–	4–20 Φ	2–16 Φ	4L–12 Φ@150 C/C	–
RFB2A	650	350	4–16 Φ	–	4–20 Φ +2–16 Φ	–	4L–12 Φ@150 C/C	–
RFB3	450	350	4–16 Φ	–	4–16 Φ	2–16 Φ	4L–12 Φ@100 C/C	–
RFB3A	650	350	4–16 Φ	–	4–16 Φ +2–16 Φ	–	4L–12 Φ@100 C/C	–
RFB4	500	350	4–16 Φ	–	4–16 Φ	2–16 Φ	4L–8 Φ@150 C/C	–
RFB5	500	350	4–16 Φ	–	4–20 Φ	2–16 Φ	4L–8 Φ@150 C/C	–
RFB6	500	350	4–20 Φ	2–16 Φ	4–20 Φ	2–16 Φ	4L–8 Φ@150 C/C	–